Anritsu Advancing beyond

EcoSyn™ Lite

Microwave Frequency Synthesizer Module

MG36021A

10 MHz to 20 GHz

Introduction

Anritsu introduces a new generation of compact microwave frequency synthesizer module, the EcoSyn Lite MG36021A. With frequency coverage up to 20 GHz, the new EcoSyn Lite module completely redefines the standards for integrated signal generation, setting another new industry benchmark for performance and accuracy. The MG36021A is the culmination of over 60 years of microwave test and measurement equipment development, using the very latest technologies to deliver accuracy and precision previously reserved only for benchtop instruments.

Signal Generator Features

- 10 MHz to 20 GHz coverage
- 0.001 Hz resolution
- 50 µs frequency switching
- Instrument-grade spectral purity
- Internal OCXO reference
- SCPI and QuickSyn® native commands
- Amplitude control
- Sweep and list modes
- USB & SPI control interface
- Compact size 101.6 mm x 101.6 mm x 20.32 mm (4 x 4 x 0.8 in)

Applications

- Low-cost instrumentation
- LO for converter tests
- Optical clocking
- Mil/Aero embedded solutions

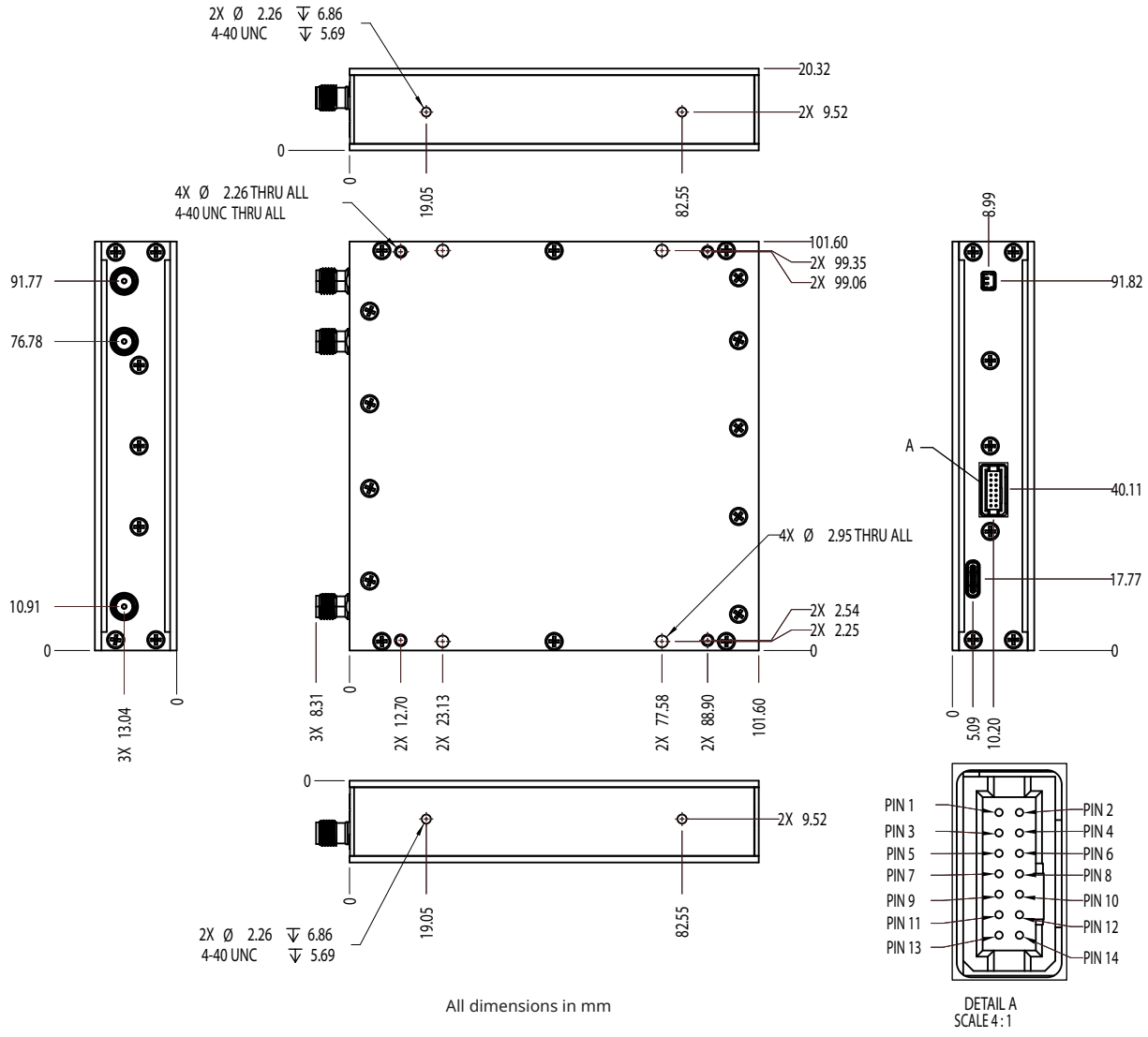

All dimensions in mm

Table of Contents

Definitions . . . 3
Performance Specifications . . . 4
General Specifications . . . 6
Remote Interface . . . 7
SPI Interface . . . 7
Ordering Information - Instrument Options . . . 8
Notes . . . 8

Definitions

Warranted Performance	All specifications and characteristics apply under the following conditions, unless otherwise stated: • After 30 minutes of warm-up time, where the instrument is left in the on state. • Over the 25 °C ± 5 °C temperature range.
Typical Performance	Typical specifications describe performance that will be met by a minimum of 80% of all products. They do not include guard bands and are not warranted
Nominal Performance	Represents representative performance not warranted or statistically derived from measurements, but by design
Time Base Error	Input Frequency × Frequency Reference Error
Calibration Cycle	Calibration is within the recommended 24 month period
	All specifications in this data sheet are subject to change without notice. For the most current data sheet, please visit the Anritsu web site: www.anritsu.com

Performance Specifications

Frequency

Frequency Range[1]	10 MHz to 20 GHz
Frequency Resolution	0.001 Hz
Frequency Stability	± 0.3 ppm
Frequency Accuracy	Reference ±5 ppb
Frequency Switching Time[2]	50 µs (triggered list mode) 500 µs (individual SPI commands)
List Mode	64,000 points

Internal Reference

Output Frequency	10 MHz nominal
Output Power	+5 dBm ± 2 dBm
Reference Mute	–60 dBm max
Frequency Temp. Stability	± 0.3 ppm
Aging[3]	± 0.5 ppm / year
Locking Range	± 2 ppm
Output Impedance	50 Ω nominal

External Reference

Input Frequency	10 MHz
Input Power	+5 dBm ± 10 dBm
Absolute Max. Input Level	+15 dBm
Input Impedance	50 Ω nominal

Power

Frequency	Output Power
10 MHz to < 50 MHz	+15 dBm
50 MHz to < 3.7 GHz	+20 dBm
3.7 GHz to 20 GHz	+18 dBm

Power Control Range	> 20 dB
Level Accuracy	±1.5 dB
Resolution	±0.5 dB
RF Output On/Off Ratio	> 60 dB min, > 75 dB typical
Output Return Loss	10 dB nominal

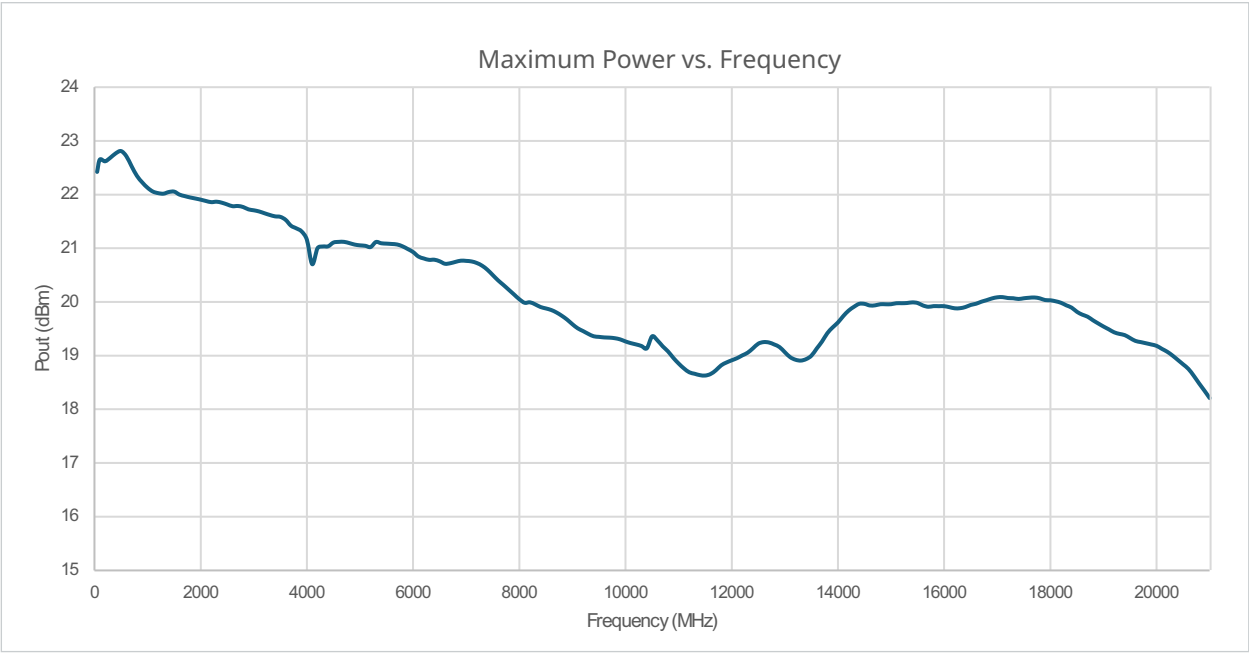

Spectral Purity (Measured at +10 dBm)

Harmonics	–10 dBc nominal
Non-Harmonic Spurious	–60 dBc max

Phase Noise (dBc/Hz)	0.1 GHz		1 GHz		5 GHz		10 GHz		20 GHz	
	typ	max	typ	max	typ	max	typ	max	typ	max
100 Hz	–134	–131	–116	–113	–101	–98	–95	–92	–89	–86
1 kHz	–142	–139	–137	–134	–124	–121	–118	–115	–112	–109
10 kHz	–151	–148	–143	–140	–132	–129	–126	–123	–120	–117
100 kHz	–156	–153	–144	–141	–134	–131	–128	–125	–121	–118
1 MHz	–156	–153	–142	–139	–132	–129	–126	–123	–120	–117
10 MHz	–158	–155	–151	–148	–145	–142	–139	–136	–133	–130

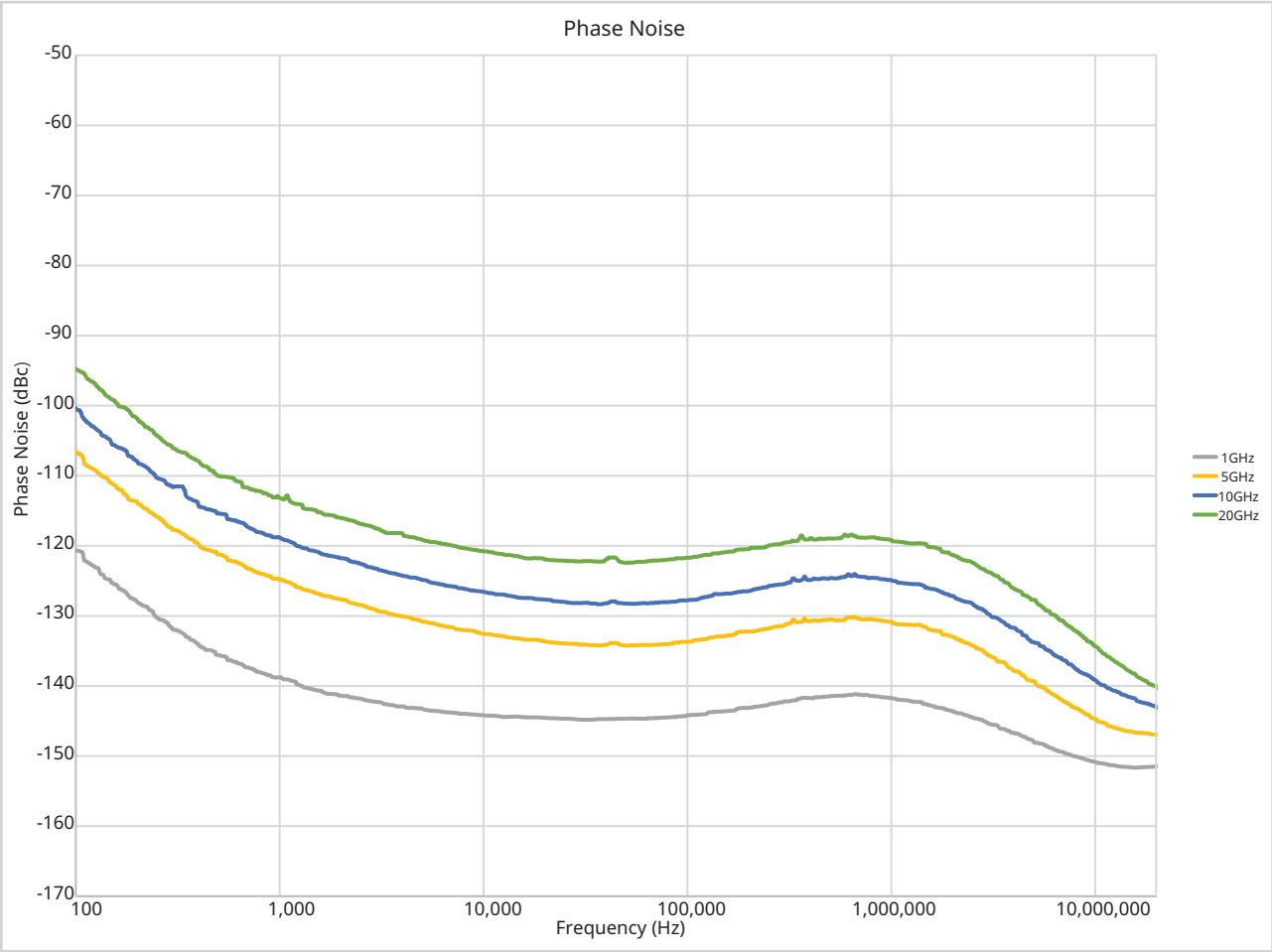

RMS Jitter BW from 50 Hz to 15 KHz

Frequency	Jitter
@ 100 MHz	14.24 fs
@ 1 GHz	6.20 fs
@ 5 GHz	6.04 fs
@ 10 GHz	5.98 fs
@ 20 GHz	5.98 fs

General Specifications

Connectors	
RF OUT	SMA(f)
REF OUT	SMA(f)
REF IN	SMA(f)
SPI	14 pin, 1.27 mm spaced double-row header[5] (See "SPI Interface" on page 7)
USB	USB-C receptacle (USB 2.0). Provides access to serial communication, utilized for firmware updates and remote interfaces.
12 V OUT	2 pin header. Provides power for external 12 V fan. 500 mA max.
Electrical	
Supply Voltage	+12 VDC ± 5%
Absolute Max. Supply Voltage	+15 VDC
Power Consumption	15 W nominal
Environmental	MIL-PRF-28800F Class 2/3
Temperature Range[4]	0 ˚C to +50 ˚C (operating) –40 ˚C to +70 ˚C (non-operating)
Warm-up Time	30 minutes
Regulatory Compliance	
European Union	EMC 2014/30/EU, EN 61326-1:2013, CISPR-11/EN 55011, IEC/EN 61000-4-2/3/4/5/6/8/11 Low Voltage Directive 2014/35/EU Safety EN 61010-1:2010 RoHS Directive 2011/65/EU & 2015/683
United Kingdom	EMC SI 2016/1091; BS EN 55011 & BS EN 61000-4-2/3/4/5/6/8/11 Consumer Protection (Safety) SI 2016/1f; BS EN 61010-1:2010 Environmental Protection SI 2012/3032; 2011/65/EU & 2015/863
Australia and New Zealand	RCM AS/NZS 4417:2012
South Korea	R-R-A2J-1017
Canada	ICES-1(A)/NMB-1(A)
Warranty	
Duration	One-year warranty
Size and Weight	
Size	101.6 mm x 101.6 mm x 20.32 mm
Weight	0.38 kg (0.84 lb)

Remote Interface

Functionality	Full instrument programming control (except power on/off)
Programming Language	Standard Commands for Programmable Instruments (SCPI), QuickSyn® Native Commands
Interfaces	14-pin SPI header

SPI Interface

SPI Clock Timing

The SPI clock schemes.

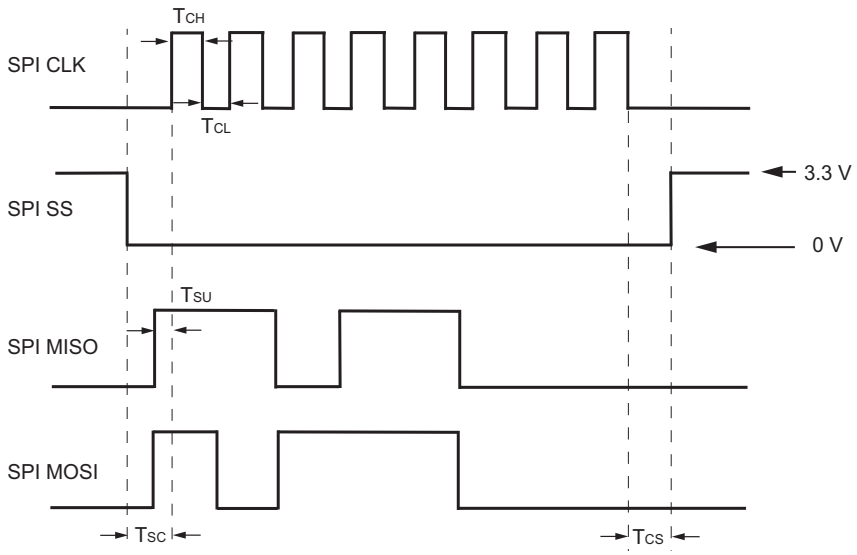

T_{SC} > 25 ns	Select low before first clock
T_{CS} > 25 ns	Clock low before secondary select high
T_{SU} > 15 ns	Data stable before rising edge of clock
T_{CH} > 40 ns	Minimum clock high time
T_{CL} > 40 ns	Minimum clock low time
FCLK ≤ 12 MHz	Maximum clock frequency

SPI Pin-Out

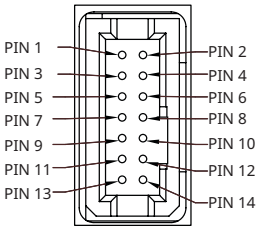

Signal	Pin	Description
PWR_+12V	Pin 1, 2	External +12 VDC Supply.
N/C	Pin 3, 4	Not connected.
SPI_CLK	Pin 5	SPI clock. Supplied by the controlling computer (not the synthesizer). The controlling computer is the SPI primary; the synthesizer is the SPI secondary.
SPI_SS	Pin 6	SPI Secondary Select. This signal is an active low input to the synthesizer. It frames command communications. For each command, SPI_SS goes low before the first bit is sent and goes high after the last bit is sent.
LOCK	Pin 7	Output indicates the synthesizer is locked on its current setting (+3.3 V locked, 0 V unlocked).
SPI_MISO	Pin 8	Primary In/Secondary Out. Status and other returned information from the synthesizer to the controlling computer.
REF LOCK	Pin 9	Output indicates the synthesizer has detected an external reference signal and locked on that signal (+3.3 V locked, 0 V unlocked).
SPI_MOSI	Pin 10	Primary Out/Secondary In command data from the controlling computer to the synthesizer.
GND	Pin 11	Ground.
TRIGGER	Pin 12	Rising edge active input. When enabled, the trigger signal of +3.3 V can initiate frequency change or step through lists or sweeps.
RESET	Pin 13	Internally pulled-up with 100 kΩ resistor. Active “LOW” signal will reset the synthesizer to a default state.
GND	Pin 14	Ground.

Ordering Information - Instrument Options

Part Number	Description
MG36021A	EcoSyn Lite, Frequency Range 10 MHz to 20 GHz
MG36021A-0098	Standard Calibration to ISO17025 and ANSI/NCSL Z540-1, includes calibration certificate

Standard Accessories

Accessory	Description	Accessory	Description
	2100-43-R Development Cable		40-187-R AC/DC Power Supply, 1m, 12V, Output Cable
	2000-1859-R USB Cable, USB 3.0 Type-A to Type-C, 1 m		

Optional Accessories

Accessory	Description
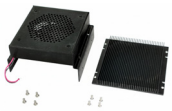	2000-2180-R Cooling Assembly Kit

Notes

1. Tested to 21.7 GHz
2. Full band step to ±5 ppm of final frequency
3. Calibration command is available
4. Adequate heat sinking must be provided in order to prevent permanent damage
5. Anritsu recommends Samtec manufactured mating socket assembly 07-28-G-03.25-DL-NDX series

Training at Anritsu

Anritsu has designed courses to help you stay up to date with technologies important to your job. For available training courses, visit: www.anritsu.com and search for training and education.

Anritsu Advancing beyond

• United States

Anritsu Americas Sales Company
490 Jarvis Drive, Morgan Hill, CA 95037-2809, U.S.A.
Phone: +1-800-Anritsu (1-800-267-4878)

• Canada

Anritsu Electronics Ltd.
Americas Sales and Support
490 Jarvis Drive, Morgan Hill, CA 95037-2809, U.S.A.
Phone: +1-800-Anritsu (1-800-267-4878)

• Brazil

Anritsu Eletronica Ltda.
Praça Amadeu Amaral, 27 - 1 Andar
01327-010 - Bela Vista - Sao Paulo - SP, Brazil
Phone: +55-11-3283-2511
Fax: +55-11-3288-6940

• Mexico

Anritsu Company, S.A. de C.V.
Blvd Miguel de Cervantes Saavedra #169 Piso 1,
Col. Granada, Mexico, Ciudad de Mexico,
11520, MEXICO
Phone: +52-55-4169-7104

• United Kingdom

Anritsu EMEA Limited
900 Capability Green,
Luton, Bedfordshire, LU1 3LU, U.K.
Phone: +44-1582-433200
Fax: +44-1582-731303

• France

Anritsu SA
12 avenue du Québec, Immeuble Goyave,
91140 VILLEBON SUR YVETTE, France
Phone: +33-1-60-92-15-50

• Germany

Anritsu GmbH
Nemetschek Haus, Konrad-Zuse-Platz 1,
81829 München, Germany
Phone: +49-89-442308-0
Fax: +49-89-442308-55

• Italy

Anritsu S.R.L.
Spaces Eur Arte, Viale dell'Arte 25, 00144 Roma, Italy
Phone: +39-6-509-9711

List Revision Date: 20251202

• Sweden

Anritsu AB
Kistagången 20 B, 2 tr, 164 40 Kista, Sweden
Phone: +46-8-534-707-00

• Finland

Anritsu AB
Technopolis Aviapolis, Teknobulevardi 3-5 (D208.5.),
FI-01530 Vantaa, Finland
Phone: +358-20-741-8100

• Denmark

Anritsu A/S
c/o Regus Winghouse, Ørestads Boulevard 73, 4th floor,
2300 Copenhagen S, Denmark
Phone: +45-7211-2200

• Spain

Anritsu EMEA Ltd.
Representation Office in Spain
Calle Manzanares 4, Primera planta, 28005
Madrid, Spain
Phone: +34-91-572-6761

• Austria

Anritsu Pty Ltd
Am Belvedere 10, A-1100 Vienna, Austria
Phone: +43-(0)1-717-28-710

• United Arab Emirates

Anritsu EMEA Ltd.
Anritsu A/S
Office No. 164, Building 17, Dubai Internet City
P. O. Box – 501901, Dubai, United Arab Emirates
Phone: +971-4-3758479

• India

ANRITSU INDIA PRIVATE LIMITED
6th Floor, Indiqube ETA, No.38/4, Adjacent to EMC2,
Doddanekundi, Outer Ring Road,
Bengaluru – 560048, India
Phone: +91-80-6728-1300
Fax: +91-80-6728-1301

• Singapore

ANRITSU PTE LTD
1 Jalan Kilang Timor, #07-04/06 Pacific Tech Centre
Singapore 159303
Phone: +65-6282-2400
Fax: +65-6282-2533

• Vietnam

ANRITSU COMPANY LIMITED
16th Floor, Peakview Tower, 36 Hoang Cau Street,
O Cho Dua Ward, Dong Da District, Hanoi, Vietnam
Phone: +84-24-3201-2730
Fax: +84-24-3201-2740

• P.R. China (Shanghai)

Anritsu (China) Co., Ltd.
Room 2701-2705, Tower A, New Caohejing
International Business Center No. 391 Gui Ping Road
Shanghai, 200233, P.R. China
Phone: +86-21-6237-0898
Fax: +86-21-6237-0899

• P.R. China (Hong Kong)

ANRITSU COMPANY LIMITED
Unit 1302, 13th Floor, New East Ocean Center,
No.9 Science Museum Road, TsimShaTsui East,
Kowloon, Hong Kong
Phone: +852-2301-4980
Fax: +852-2301-3545

• Japan

Anritsu Corporation
8-5, Tamura-cho, Atsugi-shi, Kanagawa, 243-0016 Japan
Phone: +81-46-296-6509
Fax: +81-46-225-8352

• South Korea

Anritsu Corporation, Limited
8F, A TOWER, 20, Gwacheondaero 7-gil, Gwacheon-si,
Gyeonggi-do, 13840, Republic of Korea
Phone: +82-2-6259-7300
Fax: +82-2-6259-7301

• Australia

Anritsu Pty. Ltd.
Unit 20, 21-35 Ricketts Road,
Mount Waverley, Victoria 3149, Australia
Phone: +61-3-9558-8177
Fax: +61-3-9558-8255

• Taiwan

ANRITSU COMPANY, INC.
7F, No. 316, Sec. 1, NeiHu Rd., Taipei 114, Taiwan
Phone: +886-2-8751-1816
Fax: +886-2-8751-1817

MG36021A TDS, PN: 11410-02959, Rev. C

Copyright April 2026, Anritsu Company, USA. All Rights Reserved.
® Anritsu All trademarks are registered trademarks of their respective companies.
Anritsu utilizes recycled paper and environmentally conscious inks and toner.

WEWANt

歲望有限公司
802626 高雄市苓雅區新光路38號5樓之1
電話：07-5368282 傳真：07-5368272

WEWANt Co., Ltd.
5F.-1, No.38, Xinguang Rd., Lingya Dist.,
Kaohsiung City 802, Taiwan (R.O.C.)
TEL: +886-7-5368282 FAX: +886-7-5368272

LINE